Published: 11-May-2011

Transmission / Transaxle Cooling - TDV6 2.7L Diesel - Transmission Cooling

Diagnosis and Testing

Principle of Operation

For a detailed description of the automatic transmission cooling system, refer to the relevant Description and Operation sections in the workshop manual.

Inspection and Verification

1. **1.** Verify the customer concern by operating the system.
2. **2.** Visually inspect for obvious signs of damage and system integrity.

Visual Inspection

Mechanical
• Feed and return tubes • Connections to the automatic transmission and the automatic transmission fluid cooler • Automatic transmission fluid level

3. **3.** If an obvious cause for an observed or reported concern is found, correct the cause (if possible) before proceeding to the next step.
4. **4.** If the cause is not visually evident, verify the symptom and refer to the Symptom Chart, alternatively check for Diagnostic Trouble Codes (DTCs) and refer to the DTC Index.

Symptom Chart

Condition	Possible Causes	Action
Over heating of the automatic transmission	Obstruction in the automatic transmission fluid cooler	Flush out the automatic transmission fluid cooler with new automatic transmission fluid. If the flushing is unsuccessful, install a new transmission fluid cooler. REFER to: Transmission Fluid Cooler (307-02A Transmission/Transaxle Cooling - TDV6 2.7L Diesel, Removal and Installation).
Over heating of the automatic transmission	Obstruction in the automatic transmission fluid tubes	Flush out the automatic transmission fluid cooler tubes with new automatic transmission fluid. If the flushing is unsuccessful install new automatic transmission fluid cooler tubes.
Loss of automatic transmission fluid	Connections to the automatic transmission and the automatic transmission fluid cooler	Check the integrity of the tubes, connections and seals. Check the torque of the tube fixings.
Loss of automatic transmission fluid	Leak at oil cooler	Check the integrity of tubes, connections and seals. Check the torque of the tube fixings.

DTC Index

For a list of Diagnostic Trouble Codes (DTCs) that could be logged on this vehicle, please refer to Section 100-00.
REFER to: Diagnostic Trouble Code (DTC) Index - DTC: Transmission Control Module (TCM) - Bosch (100-00 General Information, Description and Operation).

transmissionforums.com

Published: 11-May-2011

Transmission / Transaxle Cooling - TDV6 2.7L Diesel - Transmission Fluid Cooler

Removal and Installation

Removal

- NOTE: The transmission fluid cooler is part of the radiator assembly and cannot be serviced separately.

1. Remove the radiator.
   For additional information, refer to: Radiator (303-03A Engine Cooling - TDV6 2.7L Diesel, Removal and Installation).

Installation

1. Install the radiator.
   For additional information, refer to: Radiator (303-03A Engine Cooling - TDV6 2.7L Diesel, Removal and Installation).

transmissionmanuals.com

Published: 11-May-2011

Transmission / Transaxle Cooling - TDV6 2.7L Diesel - Transmission Fluid Cooler Tubes

Removal and Installation

Removal

1. Disconnect the battery ground cable.
   For additional information, refer to: Specifications (414-00 Battery and Charging System - General Information, Specifications).
2. Remove the coolant expansion tank.
   For additional information, refer to: Coolant Expansion Tank (303-03A Engine Cooling - TDV6 2.7L Diesel, Removal and Installation).

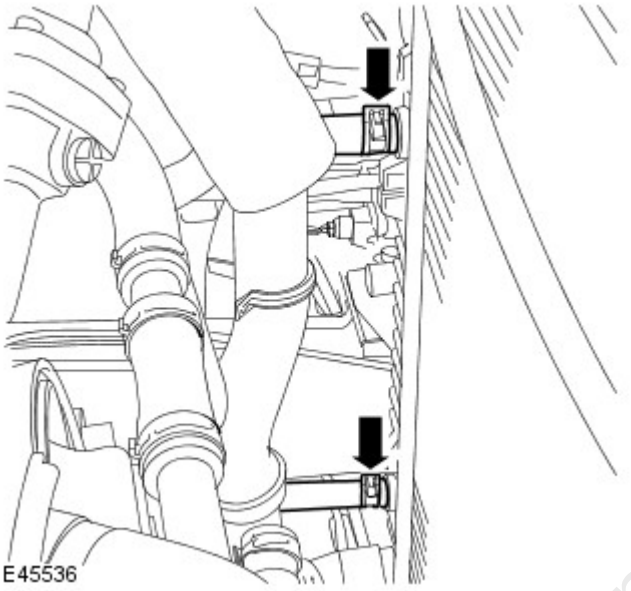

3. CAUTION: Before disconnecting or removing the components, make sure the area around the joint faces and connections are clean. Plug open connections to prevent contamination.

- NOTE: Some fluid spillage is inevitable during this operation.
- NOTE: Fan shroud shown removed for clarity.

Disconnect the 2 transmission fluid cooler coolant hoses.

- Position a container to collect the fluid spillage.
- Release the 2 clips.

4. WARNING: Do not work on or under a vehicle supported only by a jack. Always support the vehicle on safety stands.

Raise and support the vehicle.

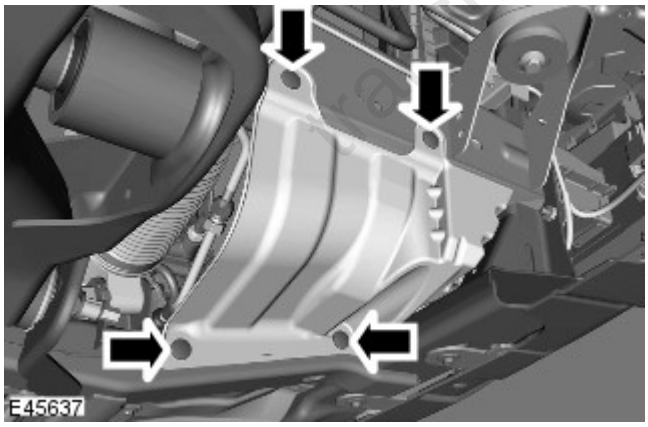

5. Remove the front LH splash shield.

- Remove the 4 clips.

transmissionmanuals.com

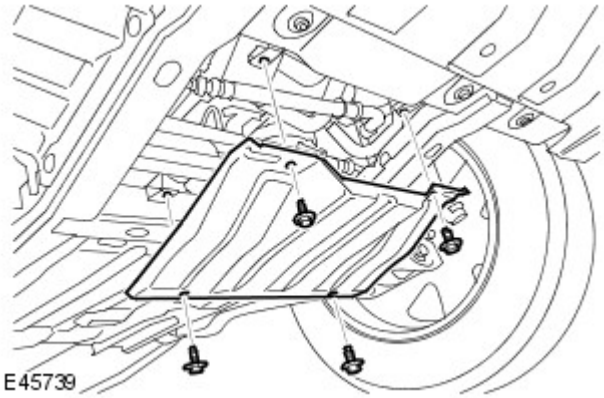

6. Remove the radiator access panel.

- Remove the 4 bolts.

7. Remove the front driveshaft.
For additional information, refer to: Front Driveshaft - TDV6 2.7L Diesel (205-01 Driveshaft, Removal and Installation).

8. Release the transmission fluid cooler hoses bracket.

- Remove the bolt.

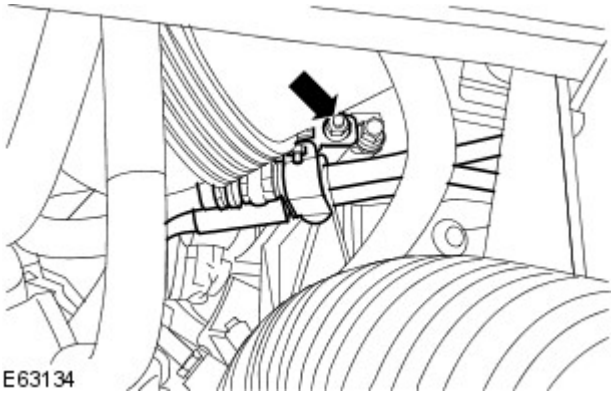

9. CAUTION: Before disconnecting or removing the components, make sure the area around the joint faces and connections are clean. Plug open connections to prevent contamination.

• NOTE: Some fluid spillage is inevitable during this operation.

Remove the transmission fluid cooler hoses.

- Position a container to collect spillage.
- Remove the bolt.

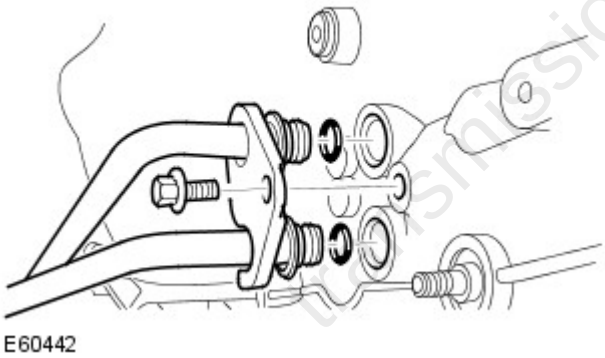

10. Remove and discard both O-ring seals.

Installation

1. To install, reverse the removal procedure.

2. Install the transmission fluid cooler hoses.

- Tighten the bolt to 10 Nm.

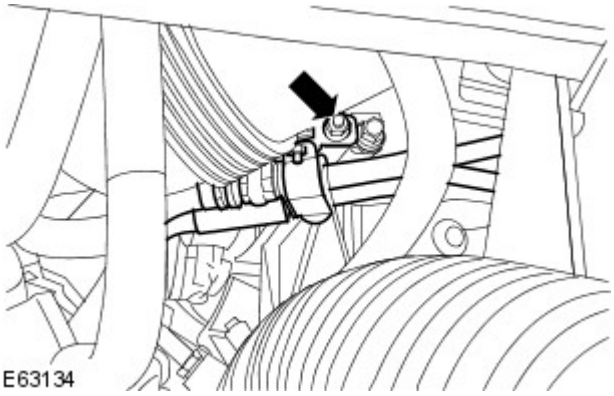

transmissionmanuals.com

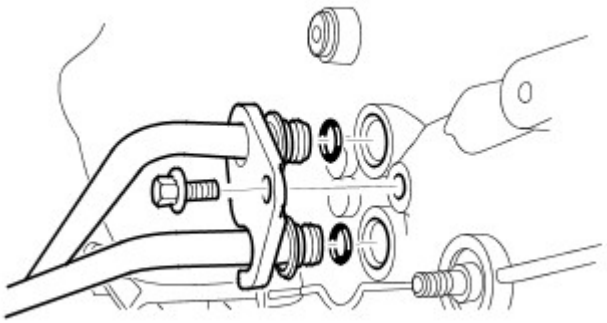

E60442

3. Connect the transmission fluid cooler hoses.

- Tighten the bolt to 10 Nm.

4. Check and top-up the transmission fluid level.
For additional information, refer to: Transmission Fluid Level Check (307-01B Automatic Transmission/Transaxle - V6 4.0L Petrol, General Procedures).

transmissionmanuals.com